Lochinvar®
High Efficiency Water Heaters, Boilers and Pool Heaters

Commercial Electric Steam Boilers

Standard Features

- ASME National Board Registered Pressure Vessel
- Heavy Duty Steel Boiler Vessel Housing
- 3" Fiberglass Insulation
- ASME Pressure Relief Valve(s)
- Pressure Gauge with Gauge Cock
- Feedwater Stop & Check Valves
- Full-Port Bottom Blowdown Valve
- Combination Float-Type Level Control / Low Water Cut-Off with Blowdown Valve
- Water Level Sight Gauge with Blowdown Valve
- Surface Blowoff Provision
- Low Water Cut-Off with Manual Reset & Pilot Light
- Adjustable High Limit with Automatic Reset
- Adjustable High Limit with Manual Reset
- Incoloy-Sheathed Elements
- Internal Branch Circuit Fusing
- Magnetic Contactors
- Main Supply Circuit Lugs
- 120 Volt Fused Control Transformer
- On/Off Switch with Pilot Light
- Preheat Switch with Pilot Light (above 240 kW)
- Key Locked Door
- Electric Control Panel
- Staged On/Off Pressure Switches (1, 2 & 3 Step Models)
- Proportional Solid State Step Control (models with more than 3 Steps)
- Status Pilot Light for each Stage/Step
- Listed by the Underwriters Laboratories
- 3 Year Limited Tank Warranty / 1 Year Parts Warranty (See warranty for details)

Optional Equipment

- Alarm Bell
- Automatic Breaker
- Automatic Feed Water Solenoid Valve
- Fused Disconnect
- Ground Fault Detector
- Kilowatt/Hour Meter
- Main Power Disconnect
- Manual Limit Toggle Switches (1 per Step)
- Automatic Timed Surface Blowoff System
- Ammeter (1 or 3 Phase)
- Volt Meter (1 or 3 Phase)
- Time Clock
- Stainless Steel Construction (100 psi/200kw Max)

Commercial Electric Steam Boiler Dimensions & Specifications

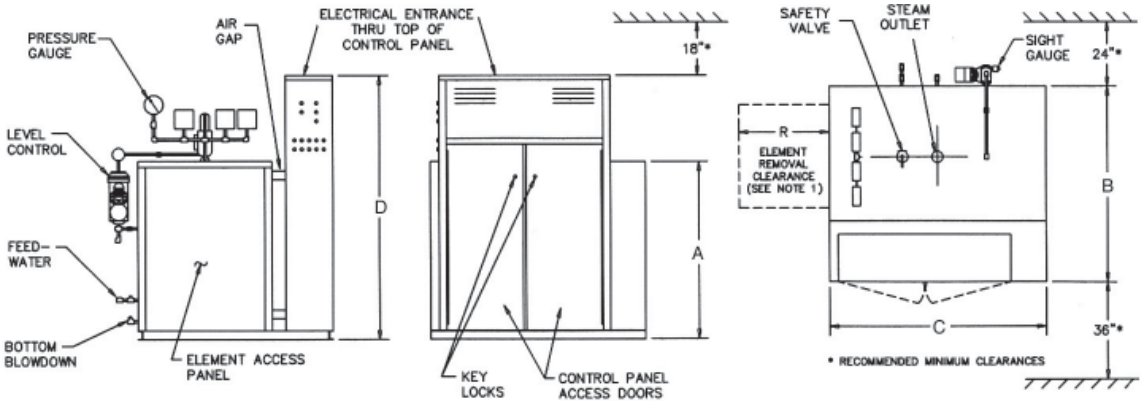

Note 1: Element removal clearance (R") is equal to 2 times the element KW.

Model Number	Max. Input kW	Steam F&A 212°F (PPH)	Max. # of Elements	Connection Sizes (NPT) Feed Water	Blowdown 15psi	Blowdown >15psi	Steam Outlet 15psi	Steam Outlet 50psi	Steam Outlet 150psi	Tank Data Dims (In)	Tank Data Vol (Gal)	Dimensions (Inches) A	B	C	D	Weight (lbs) Ship	Weight (lbs) Oper.
BS*12	60	205	3	1/2"	3/4"	3/4"	1-1/4"	1"	3/4"	12x42	20	22"	28"	50"	25"	550	650
BS*16	140	478	7	1/2"	3/4"	3/4"	2"	1"	3/4"	16x42	32	26"	32"	50"	33"	750	910
BS*16	200	682	10	1/2"	3/4"	3/4"	2"	1-1/4"	3/4"	16x42	32	26"	32"	54"	33"	800	960
BS*20	240	819	12	3/4"	1"	1"	2-1/2"	1-1/4"	1"	20x42	41	30"	36"	50"	51"	1000	1200
BS*20	320	1092	18	3/4"	1"	1"	3"	1-1/2"	1"	20x42	41	30"	36"	54"	51"	1050	1250
BS*24	360	1228	18	3/4"	1-1/4"	1"	3"	1-1/2"	1-1/4"	24x44	74	34"	40"	52"	51"	1300	1670
BS*24	600	2047	30	3/4"	1-1/4"	1"	4" FLG	2"	1-1/2"	24x44	74	34"	40"	56"	51"	1400	1770
BS*30	960	3276	48	3/4"	1-1/2"	1"	6" FLG	3" FLG	2"	30x46	124	40"	48"	60"	63"	1700	2340
BS*36	1280	4367	64	1"	1-1/2"	1"	6" FLG	3" FLG	2"	36x46	166	46"	54"	60"	63"	2100	2960
BS*42	1880	6415	94	1"	1-1/2"	1"	8" FLG	4" FLG	3" FLG	42x48	230	52"	62"	64"	81"	2800	4000
BS*48	2400	8325	122	1"	2"	1-1/4"	8" FLG	5" FLG	3" FLG	48x54	345	58"	63"	70"	87"	4600	6300
BS*54	3040	11598	152	1-1/4"	2"	1-1/4"	10" FLG	6" FLG	4" FLG	54x60	500	66"	74"	76"	89"	5600	8100

Commercial Electric Steam Boilers

208 & 240 Volt Ratings

Model Number	Rating PPH†	Rating kW	Elements Qty	Elements kW	Number of Cir.	Number of Steps@ kW	Amps (208/3)
BS*12-015	51	15	1	15	1	1@15	42
BS*12-030	102	30	2	15	2	1@30	84
BS*12-045	154	45	3	15	3	1@15,1@30	125
BS*16-060	205	60	4	15	4	2@30	167
BS*16-075	256	75	5	15	5	1@15,2@30	209
BS*16-090	307	90	6	15	6	3@30	251
BS*16-105	358	105	7	15	7	1@15,3@30	292
BS*16-120	409	120	8	15	8	4@30	334
BS*16-135	461	135	9	15	9	1@15,4@30	376
BS*16-150	512	150	10	15	10	5@30	417
BS*20-165	563	165	11	15	1	1@15,5@30	459
BS*20-180	614	180	12	15	12	6@30	501
BS*20-195	665	195	13	15	13	1@15,6@30	542
BS*20-210	717	210	14	15	14	7@30	584
BS*20-225	768	225	15	15	15	1@15,7@30	626
BS*20-240	819	240	16	15	16	8@30	667
BS*24-255	870	255	17	15	17	1@45,7@30	709
BS*24-270	921	270	18	15	18	1@60,7@30	751
BS*24-285	972	285	19	15	19	1@60,1@45,6@30	793
BS*24-300	1024	300	20	15	20	2@60,6@30	834
BS*24-315	1075	315	21	15	21	2@60,1@45,5@30	876
BS*24-330	1126	330	22	15	22	3@60,5@30	918
BS*24-345	1177	345	23	15	23	3@60,1@45,4@30	959
BS*24-360	1228	360	24	15	24	4@60,4@30	1001
BS*24-375	1280	375	25	15	25	4@60,1@45,3@30	1042
BS*24-390	1331	390	26	15	26	5@60,3@30	1084
BS*24-420	1433	420	28	15	28	6@60,2@30	1167
BS*24-450	1535	450	30	15	30	7@60,1@30	1251
BS*30-480	1638	480	32	15	32	8@60	1334
BS*30-510	1740	510	34	15	34	7@60,3@30	1418
BS*30-540	1842	540	36	15	36	8@60,2@30	1501
BS*30-570	1945	570	38	15	38	9@60,1@30	1584
BS*30-600	2047	600	40	15	40	10@60	1667

† From & at 212°F.
** Indicates Voltage*
Models above 390KW are also available in 15KW increments.

VOLTAGE SCHEDULE

A – 240V	1PH
B – 240V	3PH
J – 208V	1PH
K – 208V	3PH
X – 480V	3PH
W – 277V	1PH
Y – 380V	3PH
Z – 415V	3PH

FOR EASE IN ORDERING BY MODEL NUMBER

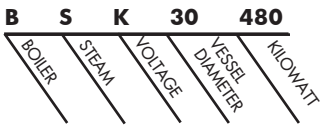

This is a 208 volt, three phase, 480 Kilowatt electric steam boiler with a 30 inch diameter vessel.

Operating temperature and pressure are requested prior to placing an order.

480 Volt Ratings

Model Number	Rating PPH†	Rating kW	Elements Qty	Elements kW	Circuits	Number of Steps@ kW	Amps (480/3)
BSX12-030	102	30	2	15	1	1@30	36
BSX12-036	123	36	2	18	1	1@36	44
BSX12-040	136	40	2	20	1	1@40	48
BSX12-045	154	45	3	15	2	1@15, 1@30	54
BSX12-054	184	54	3	18	2	1@18, 1@36	65
BSX16-060	205	60	4	15	2	2@30	72
BSX16-072	246	72	4	18	2	2@36	87
BSX16-080	273	80	4	20	3	2@40	96
BSX16-090	307	90	6	15	3	3@30	109
BSX16-108	368	108	6	18	3	3@36	130
BSX16-120	409	120	6	20	3	3@40	145
BSX16-126	430	126	7	18	4	1@18, 3@36	152
BSX16-140	478	140	7	20	4	1@20, 3@40	169
BSX16-144	491	144	8	18	4	4@36	173
BSX16-150	512	150	10	15	5	5@30	181
BSX16-160	546	160	8	20	4	4@40	193
BSX16-180	614	180	10	18	5	5@36	217
BSX16-200	682	200	10	20	5	5@40	241
BSX20-180	614	180	12	15	6	6@30	217
BSX20-198	676	198	11	18	6	1@18, 5@36	238
BSX20-210	717	210	14	15	7	7@30	253
BSX20-216	737	216	12	18	6	6@36	260
BSX20-220	751	220	11	20	6	1@20, 5@40	265
BSX20-240	819	240	12	20	6	6@40	289
BSX20-252	860	252	14	18	7	7@36	303
BSX20-260	887	260	13	20	7	1@20, 6@40	313
BSX20-270	921	270	15	18	8	1@18, 7@36	325
BSX20-280	955	280	14	20	7	7@40	337
BSX20-320	1092	320	16	20	8	8@40	385
BSX24-360	1228	360	18	20	9	9@40	433
BSX24-400	1365	400	20	20	10	10@40	481
BSX24-440	1501	440	22	20	11	1@80, 9@40	530
BSX24-480	1638	480	24	20	12	2@80, 8@40	578
BSX24-520	1774	520	26	20	13	3@80, 7@40	626
BSX24-560	1911	560	28	20	14	4@80, 6@40	674
BSX24-600	2047	600	30	20	15	5@80, 5@40	722
BSX30-640	2184	640	32	20	16	8@80	771
BSX30-680	2320	680	34	20	17	7@80, 3@40	819
BSX30-720	2457	720	36	20	18	8@80, 2@40	867
BSX30-760	2593	760	38	20	19	9@80, 1@40	915
BSX30-800	2730	800	40	20	20	10@80	963
BSX30-840	2866	840	42	20	21	9@80, 3@40	1011
BSX30-880	3003	880	44	20	22	10@80, 2@40	1059
BSX30-920	3139	920	46	20	23	11@80, 1@40	1107
BSX30-960	3276	960	48	20	24	12@80	1155
BSX36-1000	3412	1000	50	20	25	1@120, 11@80	1204
BSX36-1040	3548	1040	52	20	26	2@120, 10@80	1252
BSX36-1120	3821	1120	56	20	28	4@120, 8@80	1348
BSX36-1200	4094	1200	60	20	30	6@120, 6@80	1444
BSX36-1280	4367	1280	64	20	32	8@120, 4@80	1540
BSX42-1320	4504	1320	66	20	33	9@120, 3@80	1589
BSX42-1400	4777	1400	70	20	35	11@120, 1@80	1685
BSX42-1480	5050	1480	74	20	37	9@120, 5@80	1781
BSX42-1560	5323	1560	78	20	39	11@120, 3@80	1877
BSX42-1640	5596	1640	82	20	41	13@120, 1@80	1973
BSX42-1720	5869	1720	86	20	43	11@120, 5@80	2070
BSX42-1800	6142	1800	90	20	45	13@120, 3@80	2166
BSX42-1880	6415	1880	94	20	47	15@120, 1@80	2262
BSX48-1920	6551	1920	96	20	48	16@120	2310
BSX48-2000	6824	2000	100	20	50	14@120, 4@80	2406
BSX48-2080	7097	2080	104	20	52	16@120, 2@80	2503
BSX48-2160	7370	2160	108	20	54	18@120	2599
BSX48-2240	7643	2240	112	20	56	16@120, 2@80	2695
BSX48-2320	7916	2320	116	20	58	18@120, 2@80	2791
BSX48-2400	8189	2400	120	20	60	20@120	2888
BSX54-2480	8462	2480	124	20	62	18@120, 4@80	2984
BSX54-2560	8735	2560	128	20	64	20@120, 2@80	3080
BSX54-2640	9008	2640	132	20	66	22@120	3176
BSX54-2720	9281	2720	136	20	68**	20@120, 4@80	3272
BSX54-2800	9554	2800	140	20	70**	22@120, 2@80	3369
BSX54-2880	9827	2880	144	20	72**	24@120	3465

† From & at 212°F.
***These models may require 2 power panels (add 12 to B Dim.).*
Models above 1040kW are also available in 40kW increments.

Lochinvar® High Efficiency Water Heaters, Boilers and Pool Heaters
Lochinvar Corporation • 300 Maddox Simpson Pkwy
Lebanon, TN 37090 • 615-889-8900 / Fax: 615-547-1000